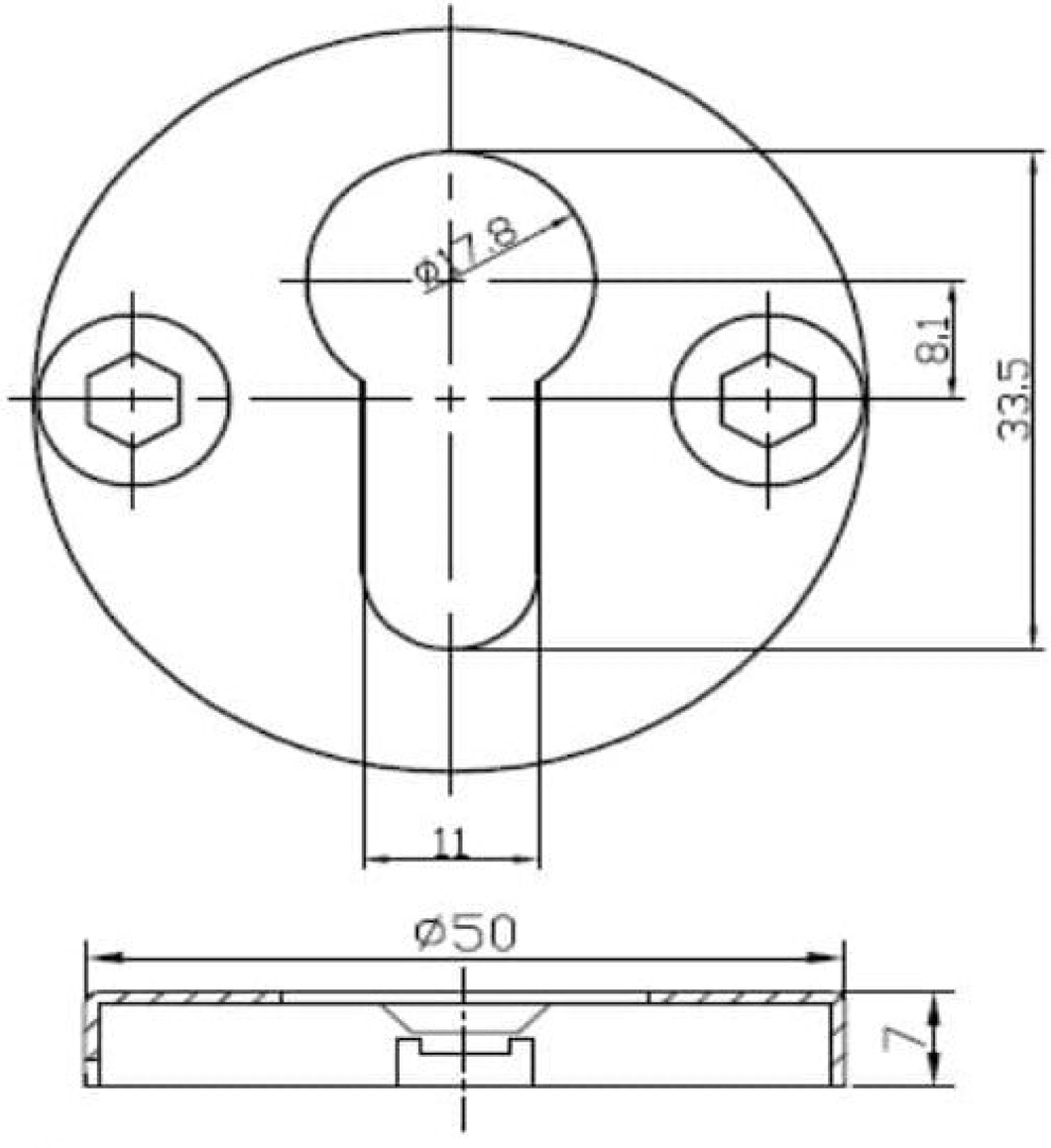

base

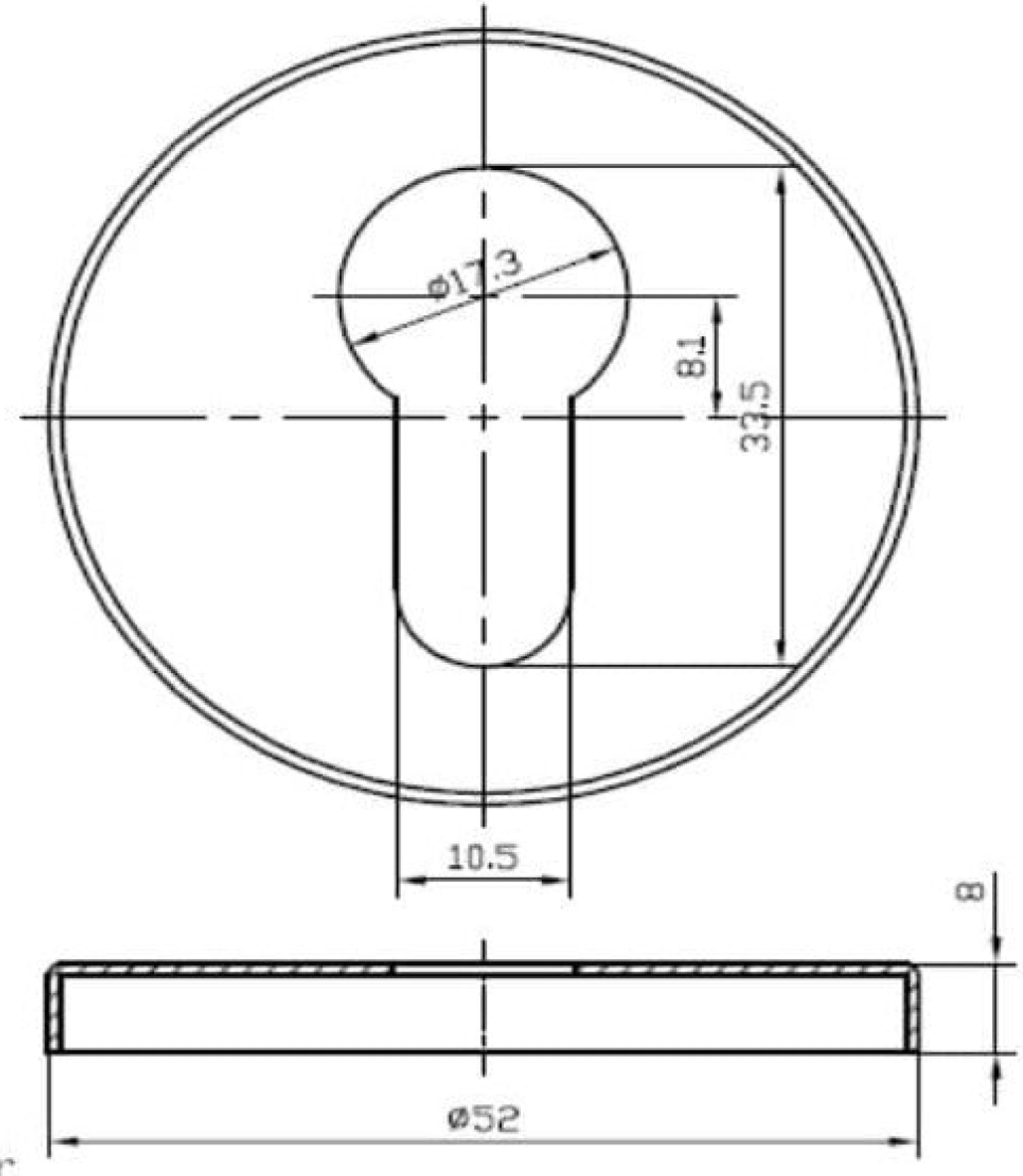

cover